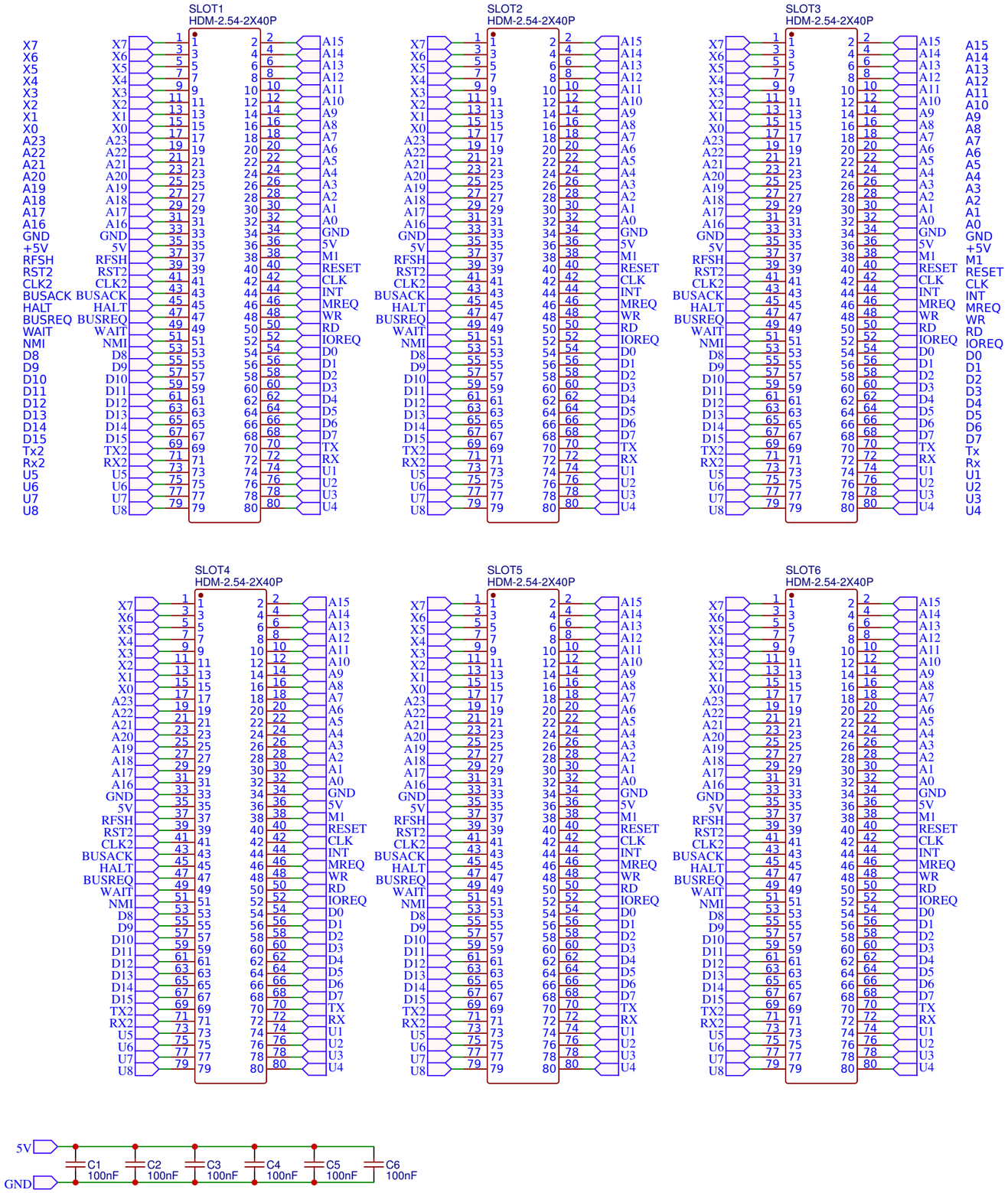

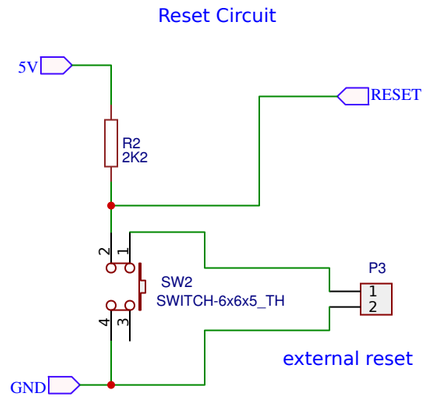

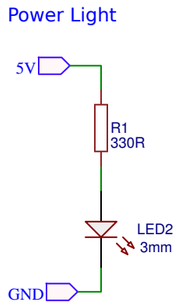

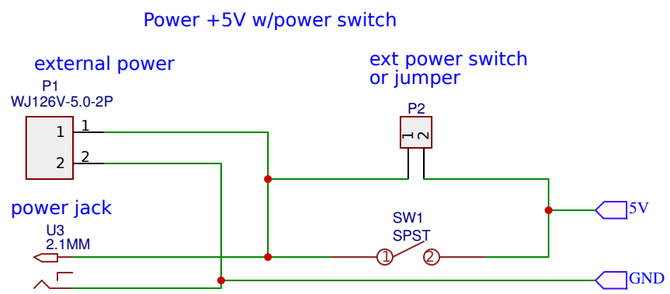

TITLE: 07 Back Plane Six	REV: B
Date: 24.08.2018	Sheet: 1/1
EasyEDA V5.1.3	Drawn By: KarlAB