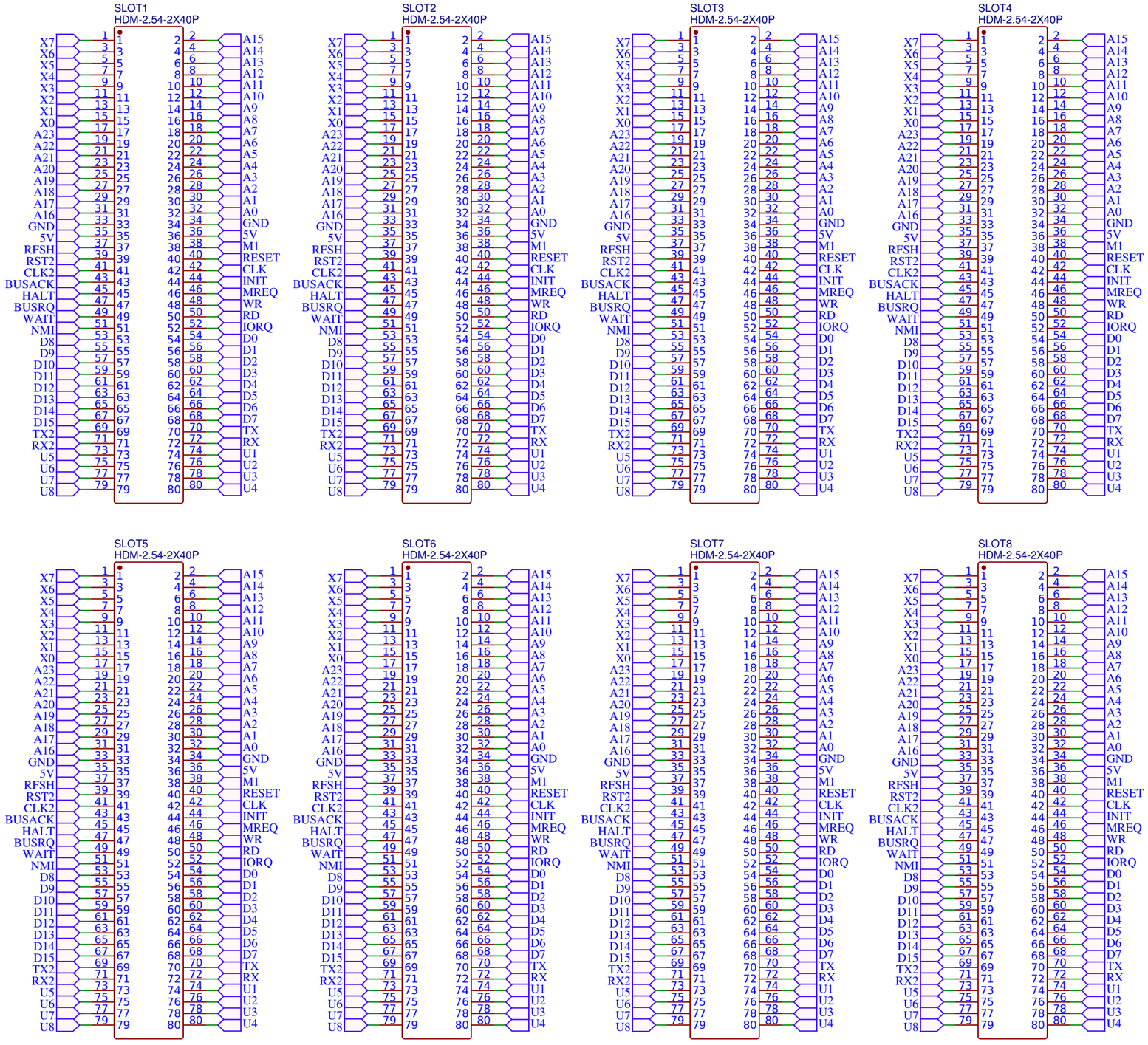

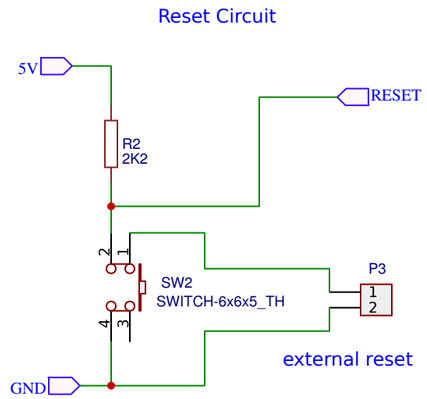

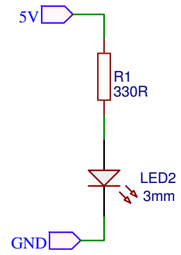

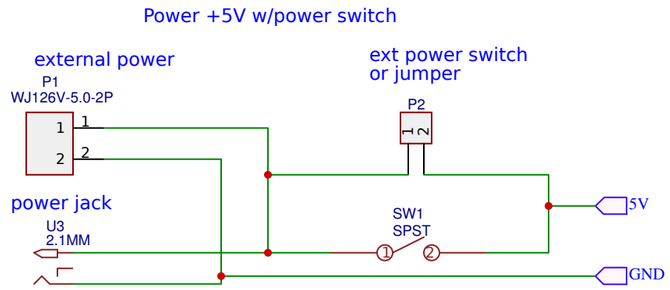

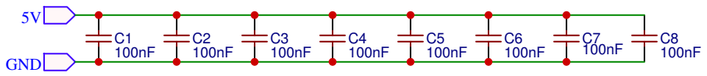

TITLE: 08 BackPlane 8	REV: B
Date: 24.08.2018	Sheet: 1/1
EasyEDA V5.1.3	Drawn By: KarlAB